PRODUCT SHEET

Description:
Glass Door Hinge "Badge" Centre, L, Alu, F/Narrow Frames, W/ Short Mounting Plate, F/Inset Doors, Thickness 4-5mm, 1 ABS, Screw W/PVC Tip & 1 ABS Screw W/Hard ø5x3,5mm ABS Extension,, Catch Made Of ABS Plastic

Item number:
15.06.251-0

Units	Box	Carton	HS Code	Barcode
Pcs.	12	240	8302100090	5704866054973

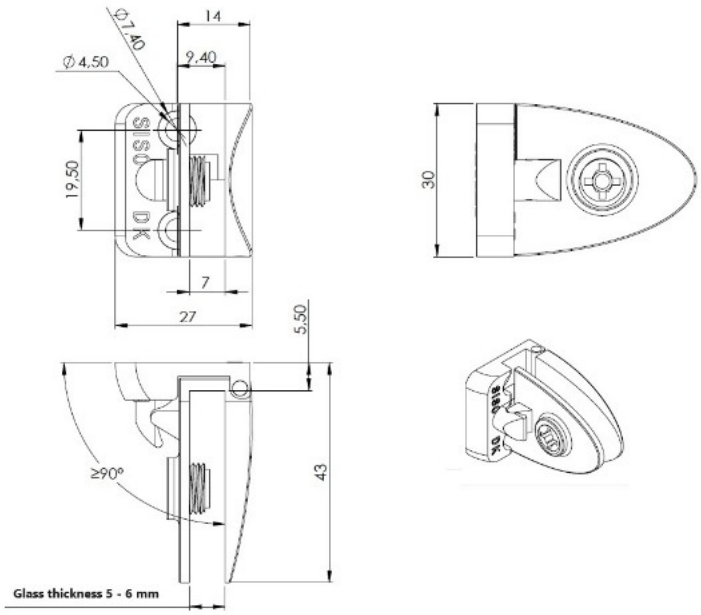

SISO A/S
Mileparken 11
DK-2740 Skovlunde
Denmark
VAT: DK 24786013

Phone +45 45 830 900

www.siso.dk
siso@siso.dk

Danske Bank
Nytorv Branch
Copenhagen
SWIFT: DABADKKK

Account no.
4180 3112 112936
IBAN Account
DK7230003112112936